AMAB-IE3 132M4 (B34S)

AMTECS

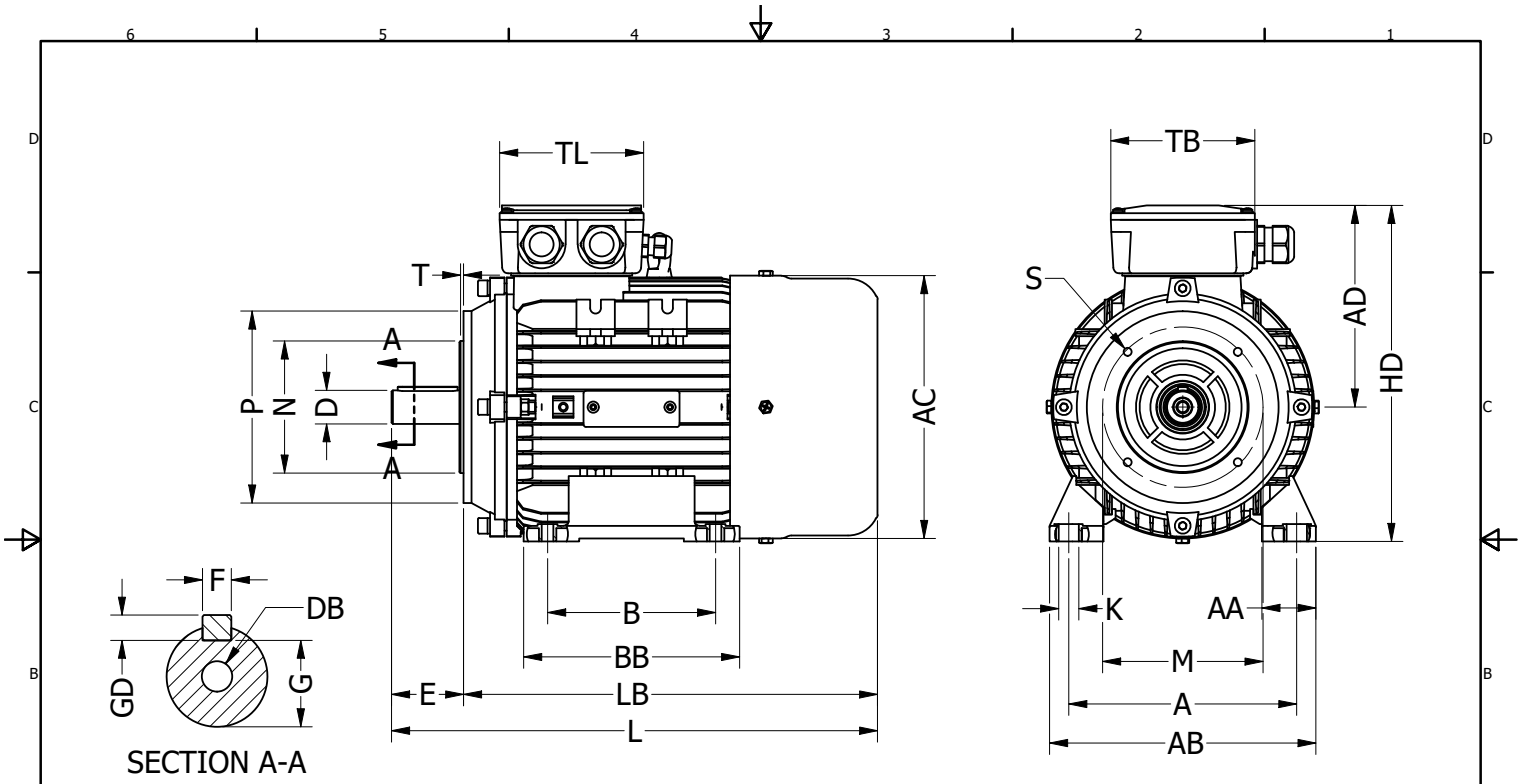

A	B	C	D	E	F	G	H	K	M	N	P	S	T	AB	BB	AC	AD	HD	L
216	178	89	38	80	10	33	132		165	130	200	M10	3.5	256		258		335	600

AMTECS LTD

TITLE
AMA (B34S)

SIZE | DWG NO | REV

SHEET 1 OF 1

This drawing serves only as a sketch to show dimensions.
The product delivered may differ. A detailed description of the product can be found below.

Specification	**IEC 60034-1**	Efficiency class	**IE3**
Manufacturer	**AmTecs**	Load data	100%
Motor type	**AMAB-IE3 132M4**	Efficiency	**90.4** %
Rated power	**7.5** kW **S1** Duty	Power factor	**0.84**
Speed	**1460** rpm	Sound pressure level (1m)	**75** dB(A)
Voltage	**400V / 690V**	Resistance R20 (open)	
Frequency	**50** Hz	Resistance R20 (Delta)	
Connection	**Delta / Star**		
Full load current	**14.3 A / 8.26 A**	Full load torque	**49.1** Nm
No-load current		Starting / Full load torque	**2**
Enclosure	**IP55**	Pull up / Full load torque	
Insulation class	**F (temp. rise B)**	Pull out / Full load torque	**2.3**
Max. ambient temp	**40** °C		
Max. altitude	**1000** mtr above sea level		
Comment			
Cable entry	**M25 x 1.5**	Starting / Full load current (DOL)	**8**
Construction	**Aluminium**	Starting / Full load current (Y/D)	
Weight	**76** Kg	Rotor Inertia	
Type number		Bearing DE	**6308**
Warranty		Bearing NDE	**6308**
Brake Torque	**80** (Nm)		
Brake Response	**0.5** (ms)		
Brake Power	**87** (W)		
Brake Voltage	**170**		

AmTecs Ltd
Charnham Park, Hungerford
Berkshire, RG17 0YT
Tel: +44 (0) 1488 686970
Fax: +44 (0) 1488 686968
sales@amtecs.co.uk
www.amtecs.co.uk

We make all efforts to better our products. Versions, technical data and figures could be changed therefore. They are not binding before written confirmation.