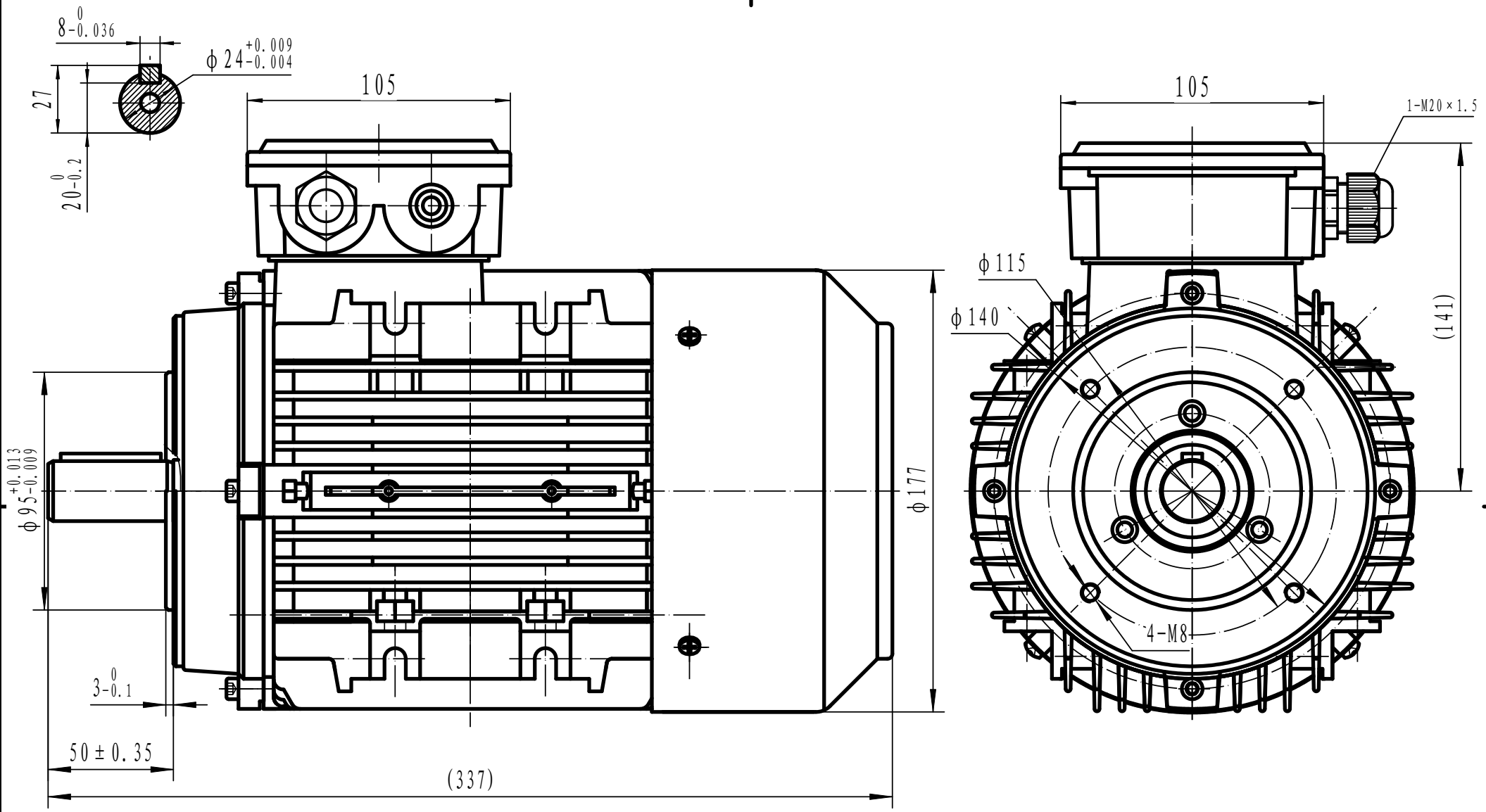

Drawn By	Date	TA90LB14
TECHTOP	27/11/2017	
Approved by	Date	
L. Overton	27/11/2017	
Issue No =	Date	
001/A	27/11/2017	

www.tecmotors.co.uk