# AMA-IE2 80K4 (B5)

AMTECS

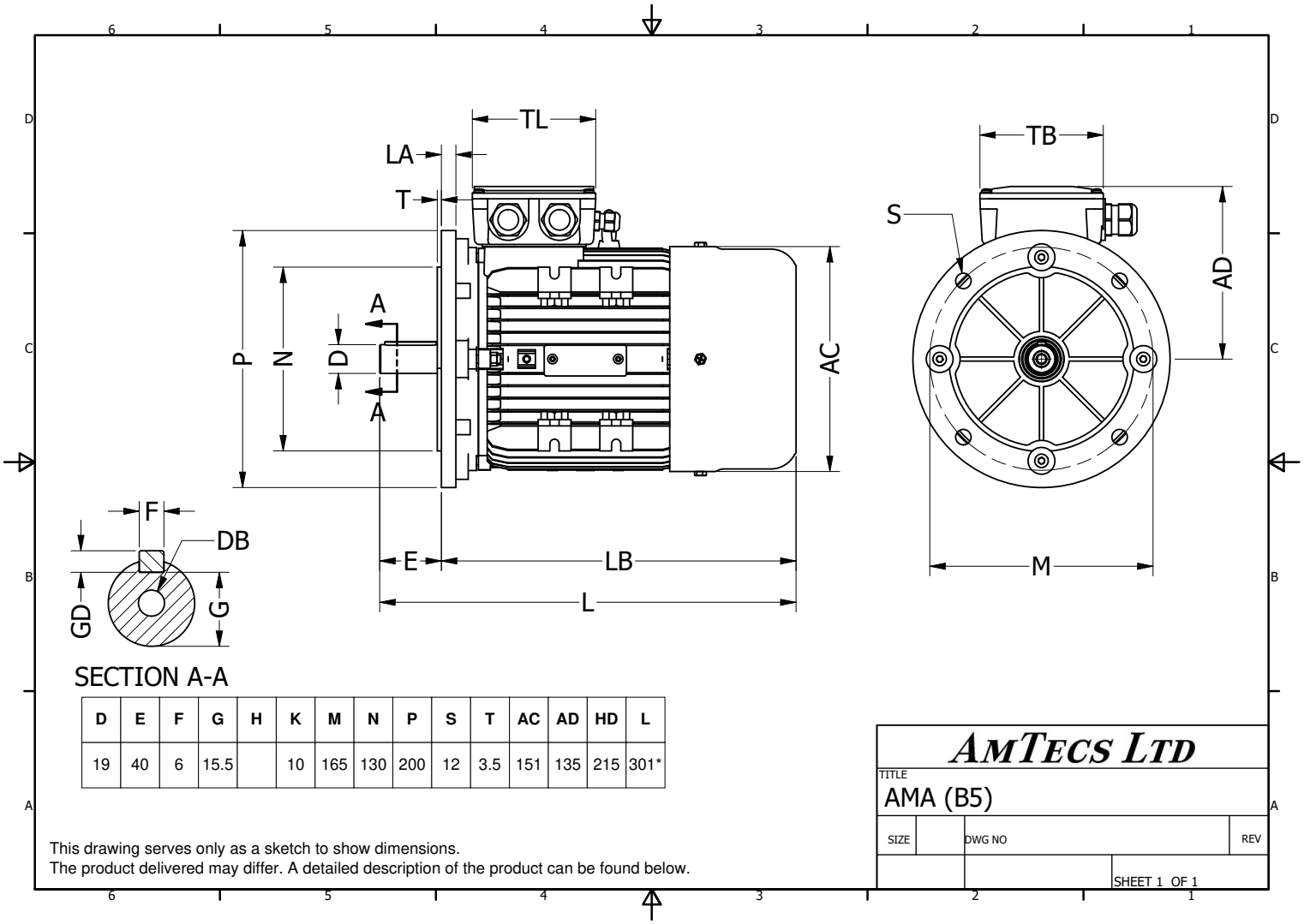


| D | E | F | G | H | K | M | N | P | S | T | AC | AD | HD | L |
|---|---|---|---|---|---|---|---|---|---|---|---|---|---|---|
| 19 | 40 | 6 | 15.5 | | 10 | 165 | 130 | 200 | 12 | 3.5 | 151 | 135 | 215 | 301* |

This drawing serves only as a sketch to show dimensions.
The product delivered may differ. A detailed description of the product can be found below.

| | | | |
|---|---|---|---|
| Specification | **IEC 60034-1** | Efficiency class | **IE2** |
| Manufacturer | **AmTecs** | Load data | 100% |
| Motor type | **AMA-IE2 80K4** | Efficiency | **77.1** % |
| Rated power | **0.55** kW **S1** Duty | Power factor | **0.71** |
| Speed | **1400** rpm | Sound pressure level (1m) | **56** dB(A) |
| Voltage | **220V / 400V** | Resistance R20 (open) | |
| Frequency | **50** Hz | Resistance R20 (Delta) | |
| Connection | **Delta / Star** | | |
| Full load current | **2.49 A / 1.43 A** | Full load torque | **3.8** Nm |
| No-load current | | Starting / Full load torque | **2.4** |
| Enclosure | **IP55** | Pull up / Full load torque | |
| Insulation class | **F (temp. rise B)** | Pull out / Full load torque | **2.6** |
| Max. ambient temp | **40** °C | | |
| Max. altitude | **1000** mtr above sea level | | |
| Comment | | | |
| Cable entry | **M20 x 1.5** | Starting / Full load current (DOL) | **5** |
| Construction | **Aluminium** | Starting / Full load current (Y/D) | |
| Weight | **10** Kg | Rotor Inertia | |
| Type number | | Bearing DE | **6204** |
| Warranty | | Bearing NDE | **6204** |


**AmTecs Ltd**
Charnham Park, Hungerford
Berkshire, RG17 0YT
Tel: +44 (0) 1488 686970
Fax: +44 (0) 1488 686968
sales@amtecs.co.uk
www.amtecs.co.uk



*We make all efforts to better our products. Versions, technical data and figures could be changed therefore. They are not binding before written confirmation.*