AM3-IE3 280S2 (B5)

AMTECS

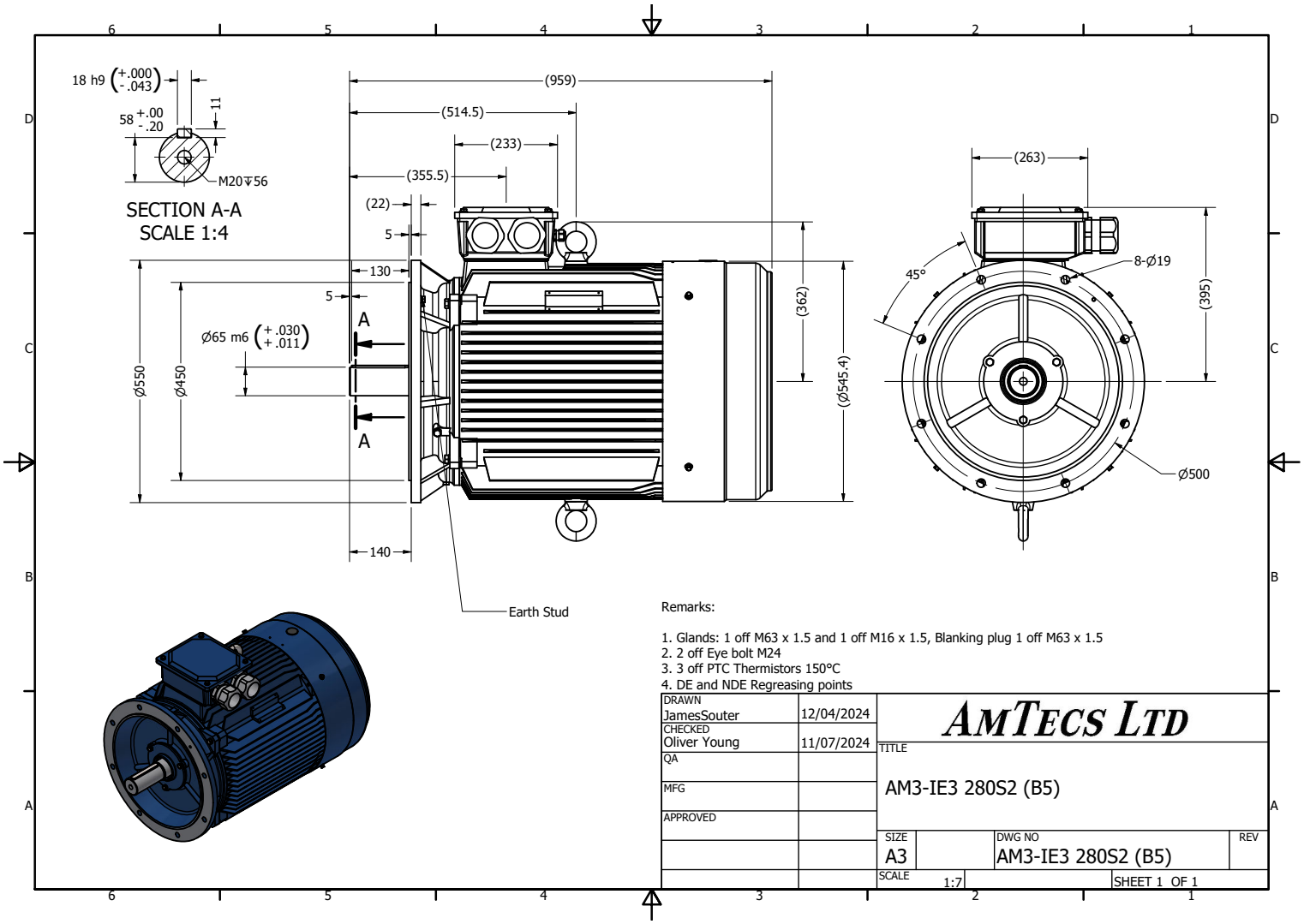

Specification	**IEC 60034-1**	Efficiency class	**IE3**
Manufacturer	**AmTecs**	Load data	100%
Motor type	**AM3-IE3 280S2**	Efficiency	**94.7** %
Rated power	**75** kW **S1** Duty	Power factor	**0.89**
Speed	**2970** rpm	Sound pressure level (1m)	**91** dB(A)
Voltage	**400V / 690V**	Resistance R20 (open)	
Frequency	**50** Hz	Resistance R20 (Delta)	
Connection	**Delta / Star**		
Full load current	**128.4 A / 74.5 A**	Full load torque	**241.2** Nm
No-load current		Starting / Full load torque	**2.5**
Enclosure	**IP55**	Pull up / Full load torque	
Insulation class	**F (temp. rise B)**	Pull out / Full load torque	**3.1**
Max. ambient temp	**40** °C		
Max. altitude	**1000** mtr above sea level		
Comment			
Cable entry	**M63 x 1.5**	Starting / Full load current (DOL)	**7.8**
Construction	**Cast Iron**	Starting / Full load current (Y/D)	
Weight	**575** Kg	Rotor Inertia	
Type number		Bearing DE	**6314**
Warranty		Bearing NDE	**6314**

AmTecs Ltd
Charnham Park, Hungerford
Berkshire, RG17 0YT
Tel: +44 (0) 1488 686970
Fax: +44 (0) 1488 686968
sales@amtecs.co.uk
www.amtecs.co.uk

We make all efforts to better our products. Versions, technical data and figures could be changed therefore. They are not binding before written confirmation.