AM3-IE3 90S2 (B35)

AMTECS

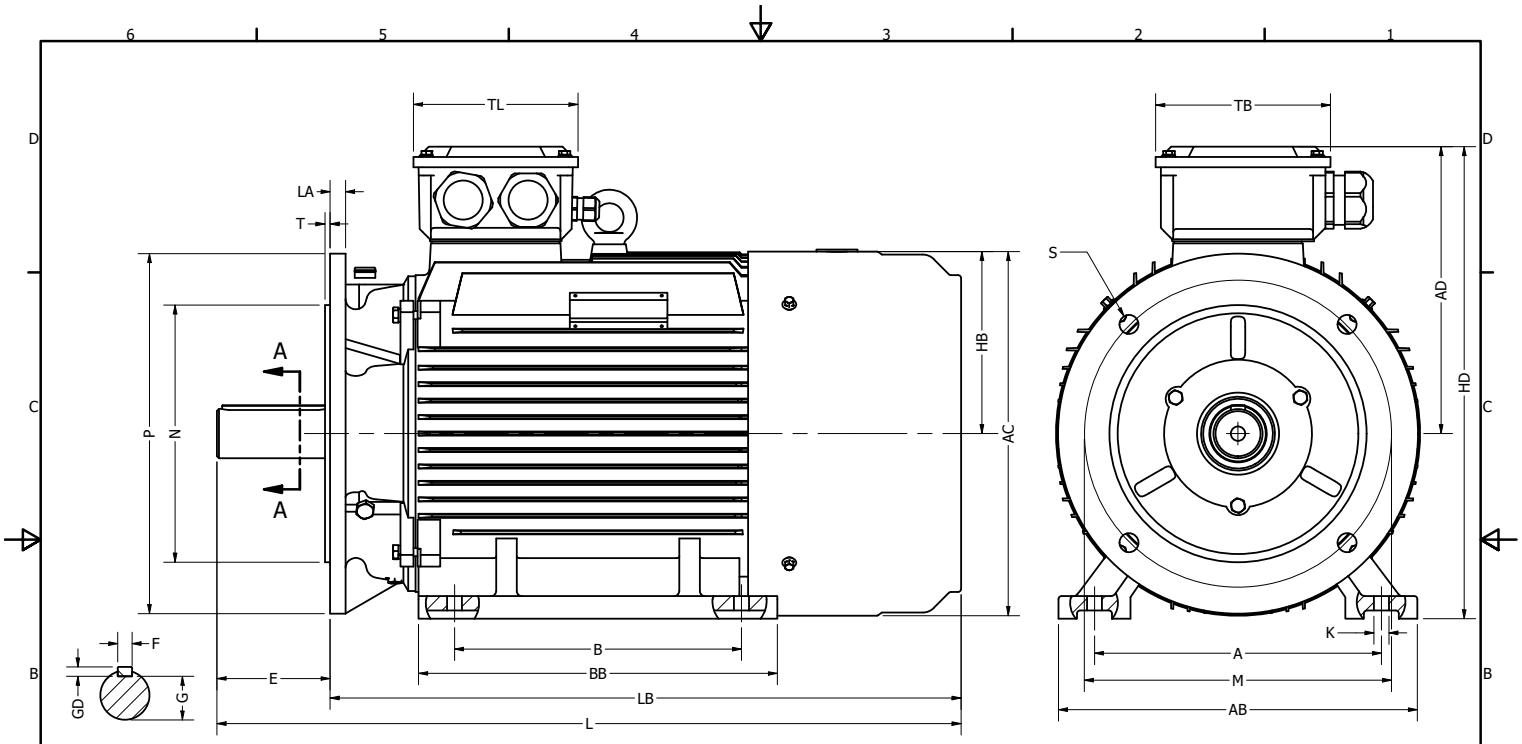

SECTION A-A
SCALE 1 / 3.5

A	B	C	D	E	F	G	H	K	M	N	P	S	T	AB	BB	AC	AD	HD	L
140	100	56	24	50	8	20	90	10	165	130	200	12	3.5	180	140	175	147	237	311

AMTECS LTD

TITLE AM1 (B35)

SIZE A3 | DWG NO | REV

SCALE 1 / 3.5 | SHEET 1 OF 1

This drawing serves only as a sketch to show dimensions.
The product delivered may differ. A detailed description of the product can be found below.

Specification	**IEC 60034-1**	Efficiency class	**IE3**
Manufacturer	**AmTecs**	Load data	100%
Motor type	**AM3-IE3 90S2**	Efficiency	**84.2** %
Rated power	**1.5** kW **S1** Duty	Power factor	**0.83**
Speed	**2895** rpm	Sound pressure level (1m)	**62** dB(A)
Voltage	**220V / 400V**	Resistance R20 (open)	
Frequency	**50** Hz	Resistance R20 (Delta)	
Connection	**Delta / Star**		
Full load current	**5.35 A / 3.09 A**	Full load torque	**4.95** Nm
No-load current		Starting / Full load torque	**2.6**
Enclosure	**IP55**	Pull up / Full load torque	
Insulation class	**F (temp. rise B)**	Pull out / Full load torque	**3.5**
Max. ambient temp	**40** °C		
Max. altitude	**1000** mtr above sea level		
Comment			
Cable entry	**M20 x 1.5**	Starting / Full load current (DOL)	**7.1**
Construction	**Cast Iron**	Starting / Full load current (Y/D)	
Weight	**26** Kg	Rotor Inertia	
Type number		Bearing DE	**6205**
Warranty		Bearing NDE	**6205**

AmTecs Ltd
Charnham Park, Hungerford
Berkshire, RG17 0YT
Tel: +44 (0) 1488 686970
Fax: +44 (0) 1488 686968
sales@amtecs.co.uk
www.amtecs.co.uk

We make all efforts to better our products. Versions, technical data and figures could be changed therefore. They are not binding before written confirmation.