AM3-IE3 355MX4 (B3)

AMTECS

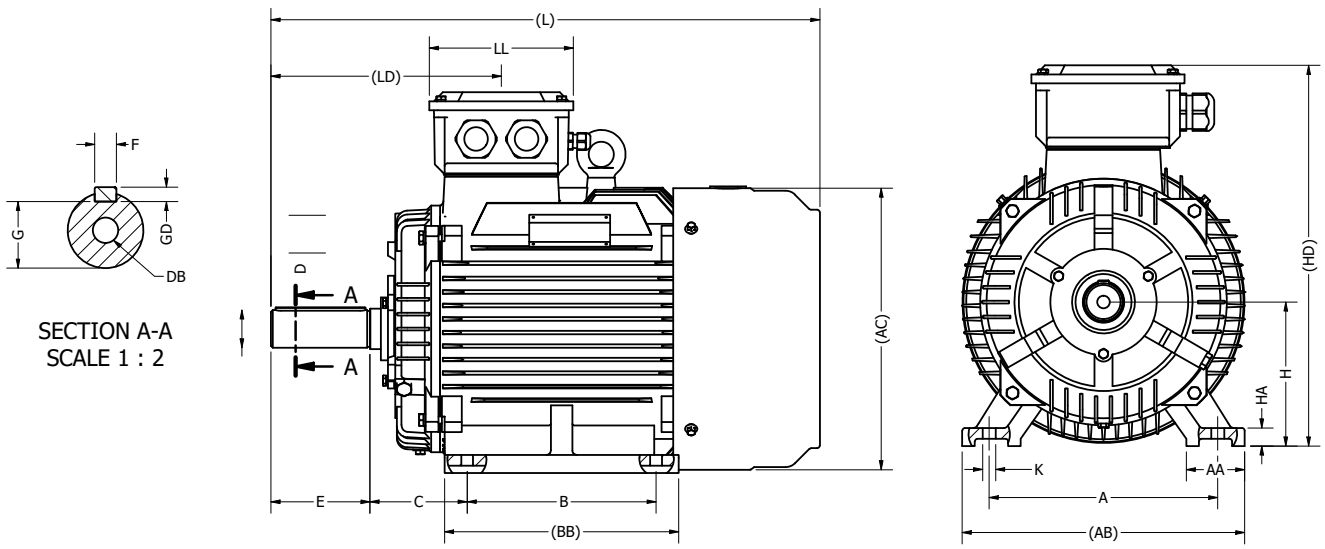

A	B	C	D	E	F	G	H	K	AB	BB	AC	AD	HD	L
610	560/63	254	100	210	28	90	355	28	750	750	698	630	985	1546

This drawing serves only as a sketch to show dimensions.
The product delivered may differ. A detailed description of the product can be found below.

AMTECS LTD

TITLE
AM1 (B3)

SIZE | DWG NO Outline AM1 (B3) | REV

SCALE

Specification	**IEC 60034-1**	Efficiency class	**IE3**
Manufacturer	**AmTecs**	Load data	100%
Motor type	**AM3-IE3 355MX4**	Efficiency	**96** %
Rated power	**250** kW **S1** Duty	Power factor	**0.9**
Speed	**1490** rpm	Sound pressure level (1m)	**95** dB(A)
Voltage	**400V / 690V**	Resistance R20 (open)	
Frequency	**50** Hz	Resistance R20 (Delta)	
Connection	**Delta / Star**		
Full load current	**417.7 A / 242.1 A**	Full load torque	**1602.3** Nm
No-load current		Starting / Full load torque	**2.1**
Enclosure	**IP55**	Pull up / Full load torque	
Insulation class	**F (temp. rise B)**	Pull out / Full load torque	**2.5**
Max. ambient temp	**40** °C		
Max. altitude	**1000** mtr above sea level		
Comment			
Cable entry	**M63 x 1.5**	Starting / Full load current (DOL)	**7.5**
Construction	**Cast Iron**	Starting / Full load current (Y/D)	
Weight	**1719** Kg	Rotor Inertia	
Type number		Bearing DE	**NU322**
Warranty		Bearing NDE	**6322**

AmTecs Ltd
Charnham Park, Hungerford
Berkshire, RG17 0YT
Tel: +44 (0) 1488 686970
Fax: +44 (0) 1488 686968
sales@amtecs.co.uk
www.amtecs.co.uk

We make all efforts to better our products. Versions, technical data and figures could be changed therefore. They are not binding before written confirmation.