AM3-IE3 315L2 (B3)

AMTECS

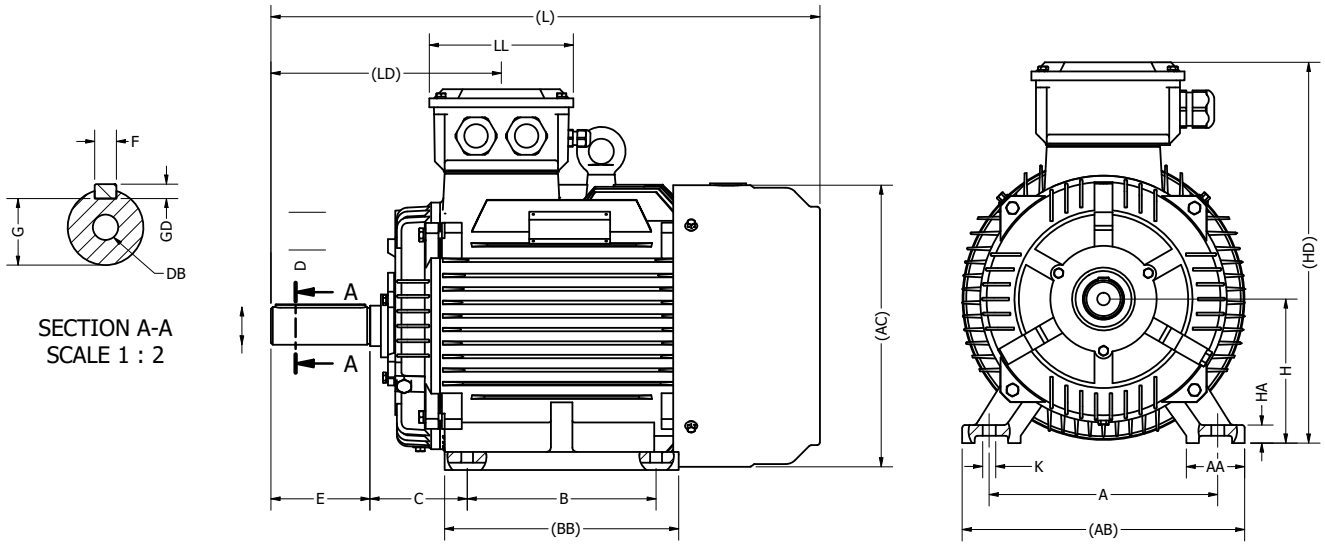

A	B	C	D	E	F	G	H	K	AB	BB	AC	AD	HD	L
508	457/500	216	65	140	18	58	315	28	628	680	620	515	830	1290

This drawing serves only as a sketch to show dimensions.
The product delivered may differ. A detailed description of the product can be found below.

AMTECS LTD

TITLE
AM1 (B3)

SIZE | DWG NO Outline AM1 (B3) | REV

SCALE

Specification	**IEC 60034-1**	Efficiency class	**IE3**
Manufacturer	**AmTecs**	Load data	100%
Motor type	**AM3-IE3 315L2**	Efficiency	**95.6** %
Rated power	**160** kW **S1** Duty	Power factor	**0.91**
Speed	**2975** rpm	Sound pressure level (1m)	**92** dB(A)
Voltage	**400V / 690V**	Resistance R20 (open)	
Frequency	**50** Hz	Resistance R20 (Delta)	
Connection	**Delta / Star**		
Full load current	**265.5 A / 153.9 A**	Full load torque	**513.6** Nm
No-load current		Starting / Full load torque	**1.9**
Enclosure	**IP55**	Pull up / Full load torque	
Insulation class	**F (temp. rise B)**	Pull out / Full load torque	**2.7**
Max. ambient temp	**40** °C		
Max. altitude	**1000** mtr above sea level		
Comment			
Cable entry	**M63 x 1.5**	Starting / Full load current (DOL)	**6.4**
Construction	**Cast Iron**	Starting / Full load current (Y/D)	
Weight	**1009** Kg	Rotor Inertia	
Type number		Bearing DE	**6317**
Warranty		Bearing NDE	**6317**

AmTecs Ltd
Charnham Park, Hungerford
Berkshire, RG17 0YT
Tel: +44 (0) 1488 686970
Fax: +44 (0) 1488 686968
sales@amtecs.co.uk
www.amtecs.co.uk

We make all efforts to better our products. Versions, technical data and figures could be changed therefore. They are not binding before written confirmation.