# AM3-IE3 225M4 (B3)

AMTECS

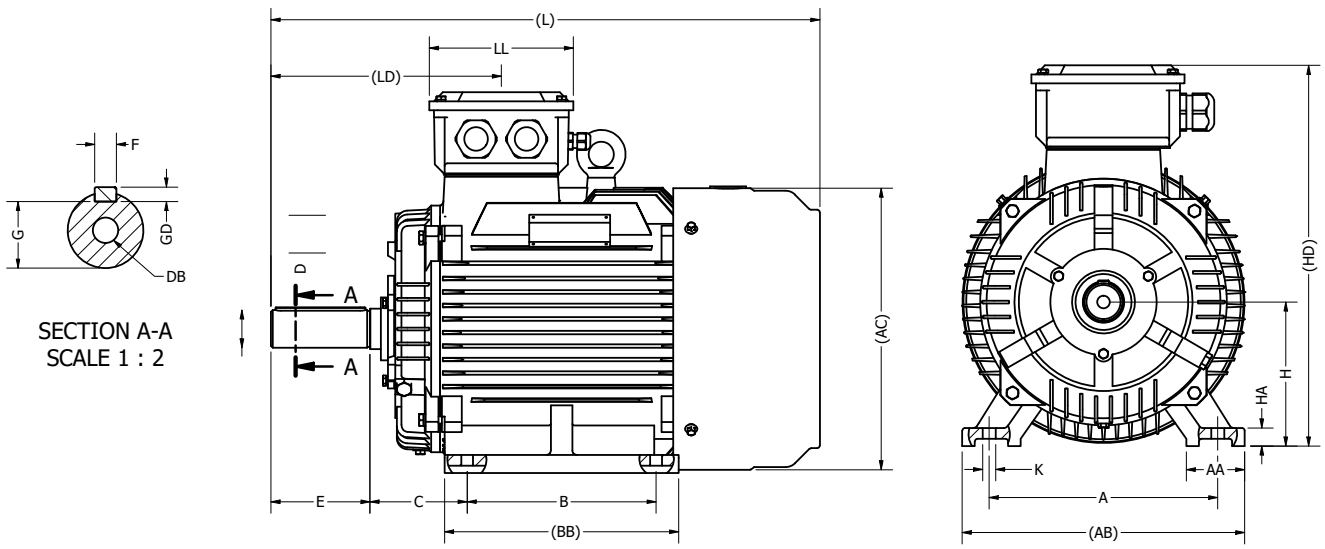


| A | B | C | D | E | F | G | H | K | AB | BB | AC | AD | HD | L |
|---|---|---|---|---|---|---|---|---|---|---|---|---|---|---|
| 356 | 311 | 149 | 60 | 140 | 18 | 53 | 225 | 18.5 | 431 | 393 | 446 | 323 | 548 | 831 |

AMTECS LTD

TITLE
AM1 (B3)

SIZE | DWG NO Outline AM1 (B3) | REV

SCALE

This drawing serves only as a sketch to show dimensions.
The product delivered may differ. A detailed description of the product can be found below.

| | | | |
|---|---|---|---|
| Specification | **IEC 60034-1** | Efficiency class | **IE3** |
| Manufacturer | **AmTecs** | Load data | 100% |
| Motor type | **AM3-IE3 225M4** | Efficiency | **94.2** % |
| Rated power | **45** kW **S1** Duty | Power factor | **0.86** |
| Speed | **1480** rpm | Sound pressure level (1m) | **78** dB(A) |
| Voltage | **400V / 690V** | Resistance R20 (open) | |
| Frequency | **50** Hz | Resistance R20 (Delta) | |
| Connection | **Delta / Star** | | |
| Full load current | **80.2 A / 46.5 A** | Full load torque | **290.4** Nm |
| No-load current | | Starting / Full load torque | **2.6** |
| Enclosure | **IP55** | Pull up / Full load torque | |
| Insulation class | **F (temp. rise B)** | Pull out / Full load torque | **3.2** |
| Max. ambient temp | **40** °C | | |
| Max. altitude | **1000** mtr above sea level | | |
| Comment | | | |
| Cable entry | **M40 x 1.5** | Starting / Full load current (DOL) | **8.5** |
| Construction | **Cast Iron** | Starting / Full load current (Y/D) | |
| Weight | **343** Kg | Rotor Inertia | |
| Type number | | Bearing DE | **6313** |
| Warranty | | Bearing NDE | **6312** |


**AmTecs Ltd**
Charnham Park, Hungerford
Berkshire, RG17 0YT
Tel: +44 (0) 1488 686970
Fax: +44 (0) 1488 686968
sales@amtecs.co.uk
www.amtecs.co.uk



*We make all efforts to better our products. Versions, technical data and figures could be changed therefore. They are not binding before written confirmation.*